Neale Davidson Class XI Assault Ship

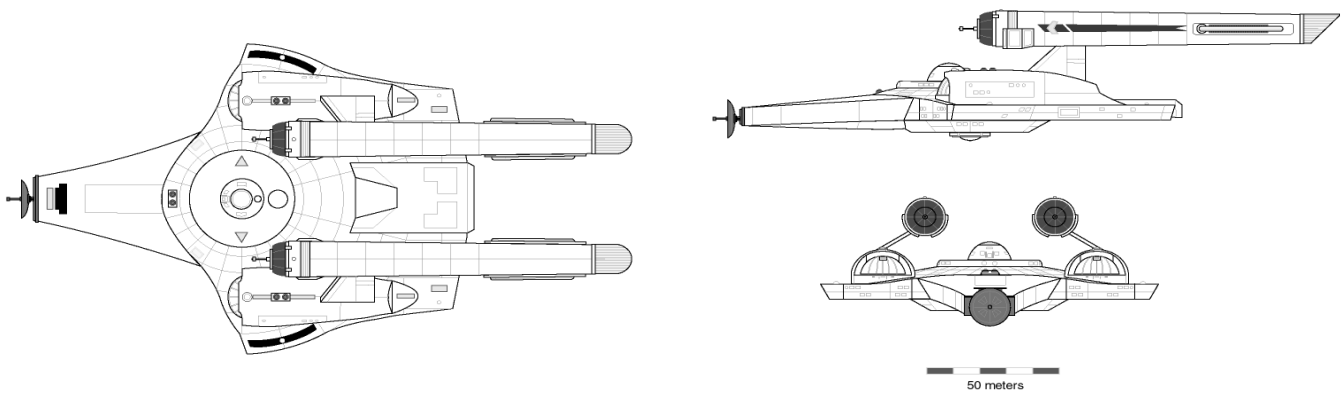

CONSTRUCTION DATA:			
Class:	XI	XI	XI
Model Number:	MK I	MK II	MK III
Date Entering Service	2231	2238	2244
Number Constructed	55	38	72
HULL DATA			
Superstructure:	22	26	29
Damage Chart:	C	C	C
Dimensions:			
Length:	235m	235m	235m
Width:	127m	127m	127m
Height:	34m	34m	34m
Weight:	167781 mt	172465 mt	177895 mt
Cargo Specs			
Total SCU:	520 SCU	530 SCU	540 SCU
Cargo Capacity:	25700 mt	26480 mt	26890 mt
Landing Capacity:	NO	NO	NO
EQUIPMENT DATA			
Computer Type:	L-8 x2	M-1 x2	M-1 x2
Cloaking Device/ECM:	None	None	None
Power to Engage:			
Transporters-			
6-person:	3	3	3
20-person Combat:	15	15	15
22-person Emergency:	5	5	5
Cargo	5	5	5
OTHER DATA			
Crew:	300	308	318
Passengers:	5	15	15
Troops:	300	300	300
Shuttlecraft-	15	15	15
ENGINE AND POWER -			
Total Power Available:	40	40	40
Movement Point Ratio:	5/1	5/1	5/1
Warp Engine Type:	FFTL-7	FFTL-7	FFTL-7
Number:	2	2	2
Power Units:	28	28	28
Stress Chart:	N/M	N/M	N/M
Max Safe Cruising Speed:	3	3	3
Emergency Speed:	5	5	5
Impulse Engine Type:	FNSP-6C	FNSP-6C	FNSP-6C
Number:	1	1	1
Power Units:	12	12	12
WEAPONS/DEFENSE			
Beam Weapon:	FL-3	FL-5	FL-6
Firing Arcs:	2P,2F,2S	2P,2F,2S	2P,2F,2S
Firing Chart:	G	H	H
Maximum Power:	2	2	3
Damage Modifiers			
+3			
+2		(1 - 4)	(1 - 4)
+1	(1 - 4)	(5 - 7)	(5 - 7)
Torpedo Type:	FAC-1	FAC-1	FAC-3
Firing Arcs:	2F	2F	2F
Firing Chart:	F	D	H
Power To Arm:	3	8	4
Damage:	8	3	12
Shields-			
Shield Type:	FDS-5	FDS-5	FSG
Shield Point Ratio:	2/1	2/1	1/1
Maximum Shield:	2	2	9
Combat Efficiency	3.2	3.6	10.7
D-	40.0	46.0	66.2
WDF-	8.1	7.8	16.2

NOTES:

Although Starfleet has always promoted the idea of peace, it has always understood the undeniable reality of war. A research study done by an independent think tank in 2224 for the Military Operations Command reported a severe deficiency in Starfleet's ability to repel a significant incursion by an agressive species.

Their conclusion stems from what they identify as an inability of Starfleet to project its power against a ground based target or against a spaceborne target occupied by enemy forces. The report cited a number of simulations using known intelligence data from the Klingons, Romulans and a variety of smaller spacefaring cultures. In most of these simulations, Starfleet ground forces were at a distinct disadvantage.

The report was submitted to the Federation Security Council later the same year, and after some deliberation, it was decided to authorize the design of an assault ship specifically to address the issues presented.

The Neale Davidson class went into service in late 2231, amongst some scrutiny and apprehension of the crews. According to the line engineers, the ships were extremely cramped for the number of troops and equipment the ship was expected to carry, and this sentiment was repeated by the command staff and crews. A series of charged debates over the effectiveness of the ship took place throughout its shakedown cruises and well into its first year of service amongst members of Starfleet and the Security Council.

Ultimately, cooler heads prevailed, and the class went on to perform to expectations. Despite its initial shortcomings, the class had a multitude of positive attributes. The twin forward facing bays allowed shuttles quick access while under the protective fire arcs of the ship's 6 laser weapons and dual accelerator cannons. The Neale Davidson's offensive capabilities were quite formidable for its day, and could stand its ground fairly well without the help of support ships. An efficient transfer system underneath the shuttles bays connected the two, and converged near main engineering, just forward of the impulse decks, to provide an area to quickly service and resupply the 300 marines, their shuttles and equipment.

The Neale Davidson class served through the Fours Years War, being instrumental in re-taking occupied planets as Starfleet pushed the Klingons back to their former borders. Starfleet Command opted not to update the class with modern drives and weaponry after the war in favor of an entirely new ship design. The Neale Davidson was finally retired from active service in 2260, many remained in reserve fleets until the 2280s.

Design by Joe Homoki www.ufc465537.scificities.com and
Bryan Jecko @ tacticalstarshipcombat.com and
FasaStarTrekUniverse@Yahoogroups
Special thanks to Lee Wood @ Morena Shipyards, for chartless system
Dedicated to the late Neale Davidson, whose passion for Trek will be missed but not forgotten. Rest in peace.

MASTER CONTROL PANEL

Race			
Vessel Class	***Neale Davidson Class XI Assault Ship***	Class	**XI**
Vessel Name		Model	**MK I**
CE	***3.2***	Captain's Name	
D	***40.0***	Captain's Skill Rating	
WDF	***8.1***	Crew Efficiency Rating	

ENGINEERING DISPLAY

WARP ENGINE TRACK

Type	1	2	3	4	5	6	7	8	9	10	11	12	13	14
FFTL-7														
	1	2	3	4	5	6	7	8	9	10	11	12	13	14

IMPULSE POWER TRACK

Type	1	2	3	4	5	6	7	8	9	10	11	12
FNSP-6C												

TURN TRACK

	#1	#2	#3	#4	#5	#6	#7	#8	#9	#10	#11	#12
Total Power Units Available **40**												
MPR **5/1**												
Power To Shields Shield Point Ratio **2/1**												
Power To Weapons												
Power To Cloak Power To Arm												

HELM DISPLAY

	#1	#2	#3	#4	#5	#6	#7	#8	#9	#10	#11	#12
Warp Speed Stress Charts **N/M**												
Movement Points												
Sensors Status	O D L	O D L	O D L	O D L	O D L	O D L	O D L	O D L	O D L	O D L	O D L	O D L
Cloak Status	ON OFF	ON OFF	ON OFF	ON OFF	ON OFF	ON OFF	ON OFF	ON OFF	ON OFF	ON OFF	ON OFF	ON OFF

WEAPONS DISPLAY

Weapon Type	Firing Arcs	Firing Chart	Max Power	PTA	Damage	Damage Modifiers +3	+2	+1
FL-3	**2P,2F,2S**	**G**	**2**					**(1 - 4)**
FAC-1	**2F**	**F**		**3**	**8**			

TURN #					#1	#2	#3	#4	#5	#6	#7	#8	#9	#10	#11	#12
Type **FL-3**	OPER DMGD	REPD INOP	Firing arc **F**													
Type **FL-3**	OPER DMGD	REPD INOP	Firing arc **F**													
Type **FL-3**	OPER DMGD	REPD INOP	Firing arc **P**													
Type **FL-3**	OPER DMGD	REPD INOP	Firing arc **P**													
Type **FL-3**	OPER DMGD	REPD INOP	Firing arc **S**													
Type **FL-3**	OPER DMGD	REPD INOP	Firing arc **S**													
Type	OPER DMGD	REPD INOP	Firing arc													
Type	OPER DMGD	REPD INOP	Firing arc													
Type	OPER DMGD	REPD INOP	Firing arc													
Type	OPER DMGD	REPD INOP	Firing arc													
Type	OPER DMGD	REPD INOP	Firing arc													
Type	OPER DMGD	REPD INOP	Firing arc													
Type	OPER DMGD	REPD INOP	Firing arc													
Type	OPER DMGD	REPD INOP	Firing arc													
Type	OPER DMGD	REPD INOP	Firing arc													
Type	OPER DMGD	REPD INOP	Firing arc													
Type	OPER DMGD	REPD INOP	Firing arc													
Type	OPER DMGD	REPD INOP	Firing arc													
Type	OPER DMGD	REPD INOP	Firing arc													
Type	OPER DMGD	REPD INOP	Firing arc													
Type	OPER DMGD	REPD INOP	Firing arc													
Type **FAC-1**	OPER DMGD	REPD INOP	Firing arc **F**													
Type **FAC-1**	OPER DMGD	REPD INOP	Firing arc **F**													
Type	OPER DMGD	REPD INOP	Firing arc													
Type	OPER DMGD	REPD INOP	Firing arc													
Type	OPER DMGD	REPD INOP	Firing arc													
Type	OPER DMGD	REPD INOP	Firing arc													
Type	OPER DMGD	REPD INOP	Firing arc													
Type	OPER DMGD	REPD INOP	Firing arc													
Type	OPER DMGD	REPD INOP	Firing arc													
Type	OPER DMGD	REPD INOP	Firing arc													

MASTER CONTROL PANEL

Race

Vessel Class ***Neale Davidson Class XI Assault Ship*** Class **XI**

Vessel Name Model **MK II**

CE ***3.6*** Captain's Name

D ***46.0*** Captain's Skill Rating

WDF ***7.8*** Crew Efficiency Rating

ENGINEERING DISPLAY

WARP ENGINE TRACK

Type **FFTL-7**

1	2	3	4	5	6	7	8	9	10	11	12	13	14
1	2	3	4	5	6	7	8	9	10	11	12	13	14

IMPULSE POWER TRACK

Type **FNSP-6C**

1	2	3	4	5	6	7	8	9	10	11	12

TURN TRACK

	#1	#2	#3	#4	#5	#6	#7	#8	#9	#10	#11	#12
Total Power Units Available **40**												
MPR **5/1**												
Power To Shields Shield Point Ratio **2/1**												
Power To Weapons												
Power To Cloak Power To Arm												

HELM DISPLAY

	#1	#2	#3	#4	#5	#6	#7	#8	#9	#10	#11	#12
Warp Speed Stress Charts **N/M**												
Movement Points												
Sensors Status	O D L	O D L	O D L	O D L	O D L	O D L	O D L	O D L	O D L	O D L	O D L	O D L
Cloak Status	ON OFF	ON OFF	ON OFF	ON OFF	ON OFF	ON OFF	ON OFF	ON OFF	ON OFF	ON OFF	ON OFF	ON OFF

WEAPONS DISPLAY

Weapon Type	Firing Arcs	Firing Chart	Max Power	PTA	Damage	Damage Modifiers +3	+2	+1
FL-5	**2P,2F,2S**	**H**	**2**				**(1 - 4)**	**(5 - 7)**
FAC-1	**2F**	**D**		**8**	**3**			

						#1	#2	#3	#4	#5	#6	#7	#8	#9	#10	#11	#12
Type **FL-5**	OPER DMGD	REPD INOP	Firing arc **F**														
Type **FL-5**	OPER DMGD	REPD INOP	Firing arc **F**														
Type **FL-5**	OPER DMGD	REPD INOP	Firing arc **P**														
Type **FL-5**	OPER DMGD	REPD INOP	Firing arc **P**														
Type **FL-5**	OPER DMGD	REPD INOP	Firing arc **S**														
Type **FL-5**	OPER DMGD	REPD INOP	Firing arc **S**														
Type	OPER DMGD	REPD INOP	Firing arc														
Type	OPER DMGD	REPD INOP	Firing arc														
Type	OPER DMGD	REPD INOP	Firing arc														
Type	OPER DMGD	REPD INOP	Firing arc														
Type	OPER DMGD	REPD INOP	Firing arc														
Type	OPER DMGD	REPD INOP	Firing arc														
Type	OPER DMGD	REPD INOP	Firing arc														
Type	OPER DMGD	REPD INOP	Firing arc														
Type	OPER DMGD	REPD INOP	Firing arc														
Type	OPER DMGD	REPD INOP	Firing arc														
Type	OPER DMGD	REPD INOP	Firing arc														
Type	OPER DMGD	REPD INOP	Firing arc														
Type	OPER DMGD	REPD INOP	Firing arc														
Type	OPER DMGD	REPD INOP	Firing arc														
Type	OPER DMGD	REPD INOP	Firing arc														
Type	OPER DMGD	REPD INOP	Firing arc														
Type	OPER DMGD	REPD INOP	Firing arc														
Type	OPER DMGD	REPD INOP	Firing arc														
Type **FAC-1**	OPER DMGD	REPD INOP	Firing arc **F**														
Type **FAC-1**	OPER DMGD	REPD INOP	Firing arc **F**														
Type	OPER DMGD	REPD INOP	Firing arc														
Type	OPER DMGD	REPD INOP	Firing arc														
Type	OPER DMGD	REPD INOP	Firing arc														
Type	OPER DMGD	REPD INOP	Firing arc														
Type	OPER DMGD	REPD INOP	Firing arc														
Type	OPER DMGD	REPD INOP	Firing arc														
Type	OPER DMGD	REPD INOP	Firing arc														
Type	OPER DMGD	REPD INOP	Firing arc														

MASTER CONTROL PANEL

Race			
Vessel Class	***Neale Davidson Class XI Assault Ship***	Class	**XI**
Vessel Name		Model	**MK III**
CE	***10.7***	Captain's Name	
D	***66.2***	Captain's Skill Rating	
WDF	***16.2***	Crew Efficiency Rating	

ENGINEERING DISPLAY

WARP ENGINE TRACK

Type **FFTL-7**

1	2	3	4	5	6	7	8	9	10	11	12	13	14
1	2	3	4	5	6	7	8	9	10	11	12	13	14

IMPULSE POWER TRACK

Type **FNSP-6C**

1	2	3	4	5	6	7	8	9	10	11	12

TURN TRACK

	#1	#2	#3	#4	#5	#6	#7	#8	#9	#10	#11	#12
Total Power Units Available **40**												
MPR **5/1**												
Power To Shields Shield Point Ratio **1/1**												
Power To Weapons												
Power To Cloak Power To Arm												

HELM DISPLAY

	#1	#2	#3	#4	#5	#6	#7	#8	#9	#10	#11	#12
Warp Speed Stress Charts **N/M**												
Movement Points												
Sensors Status	O D L	O D L	O D L	O D L	O D L	O D L	O D L	O D L	O D L	O D L	O D L	O D L
Cloak Status	ON OFF	ON OFF	ON OFF	ON OFF	ON OFF	ON OFF	ON OFF	ON OFF	ON OFF	ON OFF	ON OFF	ON OFF

WEAPONS DISPLAY

Weapon Type	Firing Arcs	Firing Chart	Max Power	PTA	Damage	Damage Modifiers +3	+2	+1
FL-6	**2P,2F,2S**	**H**	**3**				**(1 - 4)**	**(5 - 7)**
FAC-3	**2F**	**H**		**4**	**12**			

					#1	#2	#3	#4	#5	#6	#7	#8	#9	#10	#11	#12
Type **FL-6**	OPER DMGD	REPD INOP	Firing arc **F**													
Type **FL-6**	OPER DMGD	REPD INOP	Firing arc **F**													
Type **FL-6**	OPER DMGD	REPD INOP	Firing arc **P**													
Type **FL-6**	OPER DMGD	REPD INOP	Firing arc **P**													
Type **FL-6**	OPER DMGD	REPD INOP	Firing arc **S**													
Type **FL-6**	OPER DMGD	REPD INOP	Firing arc **S**													
Type	OPER DMGD	REPD INOP	Firing arc													
Type	OPER DMGD	REPD INOP	Firing arc													
Type	OPER DMGD	REPD INOP	Firing arc													
Type	OPER DMGD	REPD INOP	Firing arc													
Type	OPER DMGD	REPD INOP	Firing arc													
Type	OPER DMGD	REPD INOP	Firing arc													
Type	OPER DMGD	REPD INOP	Firing arc													
Type	OPER DMGD	REPD INOP	Firing arc													
Type	OPER DMGD	REPD INOP	Firing arc													
Type	OPER DMGD	REPD INOP	Firing arc													
Type	OPER DMGD	REPD INOP	Firing arc													
Type	OPER DMGD	REPD INOP	Firing arc													
Type	OPER DMGD	REPD INOP	Firing arc													
Type	OPER DMGD	REPD INOP	Firing arc													
Type	OPER DMGD	REPD INOP	Firing arc													
Type **FAC-3**	OPER DMGD	REPD INOP	Firing arc **F**													
Type **FAC-3**	OPER DMGD	REPD INOP	Firing arc **F**													
Type	OPER DMGD	REPD INOP	Firing arc													
Type	OPER DMGD	REPD INOP	Firing arc													
Type	OPER DMGD	REPD INOP	Firing arc													
Type	OPER DMGD	REPD INOP	Firing arc													
Type	OPER DMGD	REPD INOP	Firing arc													
Type	OPER DMGD	REPD INOP	Firing arc													
Type	OPER DMGD	REPD INOP	Firing arc													
Type	OPER DMGD	REPD INOP	Firing arc													

DAMAGE CONTROL PANEL

Neale Davidson Class XI Assault Ship ***MK I***

SHIELDS

SHIELD TYPE: **FDS-5** SHIELD POINT RATIO: **2/1** MAXIMUM SHIELD POWER: **2**

DAMAGE CHART: **C**

TURN	#1	#2	#3	#4	#5	#6	#7	#8	#9	#10	#11	#12
Shield Points Available												

TURN #1

AFT					
F/P #1	FWD #2	F/S #3	S/A #4	AFT #5	P/A #6
1 1 1	1 1 1	1 1 1	1 1 1	1 1 1	1 1 1
2 2 2	2 2 2	2 2 2	2 2 2	2 2 2	2 2 2

TURN #2

F/P #1	FWD #2	F/S #3	S/A #4	AFT #5	P/A #6
1 1 1	1 1 1	1 1 1	1 1 1	1 1 1	1 1 1
2 2 2	2 2 2	2 2 2	2 2 2	2 2 2	2 2 2

TURN #3

F/P #1	FWD #2	F/S #3	S/A #4	AFT #5	P/A #6
1 1 1	1 1 1	1 1 1	1 1 1	1 1 1	1 1 1
2 2 2	2 2 2	2 2 2	2 2 2	2 2 2	2 2 2

TURN #4

F/P #1	FWD #2	F/S #3	S/A #4	AFT #5	P/A #6
1 1 1	1 1 1	1 1 1	1 1 1	1 1 1	1 1 1
2 2 2	2 2 2	2 2 2	2 2 2	2 2 2	2 2 2

TURN #5

F/P #1	FWD #2	F/S #3	S/A #4	AFT #5	P/A #6
1 1 1	1 1 1	1 1 1	1 1 1	1 1 1	1 1 1
2 2 2	2 2 2	2 2 2	2 2 2	2 2 2	2 2 2

TURN #6

F/P #1	FWD #2	F/S #3	S/A #4	AFT #5	P/A #6
1 1 1	1 1 1	1 1 1	1 1 1	1 1 1	1 1 1
2 2 2	2 2 2	2 2 2	2 2 2	2 2 2	2 2 2

TURN #7

F/P #1	FWD #2	F/S #3	S/A #4	AFT #5	P/A #6
1 1 1	1 1 1	1 1 1	1 1 1	1 1 1	1 1 1
2 2 2	2 2 2	2 2 2	2 2 2	2 2 2	2 2 2

TURN #8

F/P #1	FWD #2	F/S #3	S/A #4	AFT #5	P/A #6
1 1 1	1 1 1	1 1 1	1 1 1	1 1 1	1 1 1
2 2 2	2 2 2	2 2 2	2 2 2	2 2 2	2 2 2

TURN #9

F/P #1	FWD #2	F/S #3	S/A #4	AFT #5	P/A #6
1 1 1	1 1 1	1 1 1	1 1 1	1 1 1	1 1 1
2 2 2	2 2 2	2 2 2	2 2 2	2 2 2	2 2 2

TURN #10

F/P #1	FWD #2	F/S #3	S/A #4	AFT #5	P/A #6
1 1 1	1 1 1	1 1 1	1 1 1	1 1 1	1 1 1
2 2 2	2 2 2	2 2 2	2 2 2	2 2 2	2 2 2

TURN #11

F/P #1	FWD #2	F/S #3	S/A #4	AFT #5	P/A #6
1 1 1	1 1 1	1 1 1	1 1 1	1 1 1	1 1 1
2 2 2	2 2 2	2 2 2	2 2 2	2 2 2	2 2 2

TURN #12

F/P #1	FWD #2	F/S #3	S/A #4	AFT #5	P/A #6
1 1 1	1 1 1	1 1 1	1 1 1	1 1 1	1 1 1
2 2 2	2 2 2	2 2 2	2 2 2	2 2 2	2 2 2

DAMAGE POINT RECORD

TURN	#1	#2	#3	#4
	#5	#6	#7	#8
	#9	#10	#11	#12

SYSTEMS REPAIR STATUS

HITS	1ST 1-8	2ND 1-6	3RD 1-4	4TH 1-2	5TH OUT
SENSORS					
SHIELD #1					
#2					
#3					
#4					
#5					
#6					
ENGINEERING GRIDS SHIELDS					
WEAPONS					
MANEUVER					

SUPERSTRUCTURE DAMAGE TRACK

1	2	3	4	5	6	7	8	9	10	11	12	13
14	15	16	17	18	19	20	21	22				

CASUALTY MODIFIER TRACK

0-19% 0	20-39% -1 -10%	40-59% -2 -20%	60-69% -5 -50%	70% + NO FIRING

CREW: **300**

PERCENT CASUALTIES TRACK

1	2	3	4	5	6	7	8	9	10	11	12	13
14	15	16	17	18	19	20	21	22	23	24	25	26
27	28	29	30	31	32	33	34	35	36	37	38	39
40	41	42	43	44	45	46	47	48	49	50	51	52
53	54	55	56	57	58	59	60	61	62	63	64	65
66	67	68	69	70	71	72	73	74	75	76	77	78
79	80	81	82	83	84	85	86	87	88	89	90	91
92	93	94	95	96	97	98	99	00				

DAMAGE CONTROL PANEL

Neale Davidson Class XI Assault Ship ***MK II***

SHIELDS

SHIELD TYPE: **FDS-5** SHIELD POINT RATIO: **2/1** MAXIMUM SHIELD POWER: **2**

DAMAGE CHART: **C**

TURN	#1	#2	#3	#4	#5	#6	#7	#8	#9	#10	#11	#12
Shield Points Available												

DAMAGE POINT RECORD

TURN	#1	#2	#3	#4
	#5	#6	#7	#8
	#9	#10	#11	#12

TURN #1

AFT	F/P #1	FWD #2	F/S #3	S/A #4	AFT #5	P/A #6
	1 1 1	1 1 1	1 1 1	1 1 1	1 1 1	1 1 1
	2 2 2	2 2 2	2 2 2	2 2 2	2 2 2	2 2 2

TURN #2

F/P #1	FWD #2	F/S #3	S/A #4	AFT #5	P/A #6
1 1 1	1 1 1	1 1 1	1 1 1	1 1 1	1 1 1
2 2 2	2 2 2	2 2 2	2 2 2	2 2 2	2 2 2

TURN #3

F/P #1	FWD #2	F/S #3	S/A #4	AFT #5	P/A #6
1 1 1	1 1 1	1 1 1	1 1 1	1 1 1	1 1 1
2 2 2	2 2 2	2 2 2	2 2 2	2 2 2	2 2 2

TURN #4

F/P #1	FWD #2	F/S #3	S/A #4	AFT #5	P/A #6
1 1 1	1 1 1	1 1 1	1 1 1	1 1 1	1 1 1
2 2 2	2 2 2	2 2 2	2 2 2	2 2 2	2 2 2

TURN #5

F/P #1	FWD #2	F/S #3	S/A #4	AFT #5	P/A #6
1 1 1	1 1 1	1 1 1	1 1 1	1 1 1	1 1 1
2 2 2	2 2 2	2 2 2	2 2 2	2 2 2	2 2 2

TURN #6

F/P #1	FWD #2	F/S #3	S/A #4	AFT #5	P/A #6
1 1 1	1 1 1	1 1 1	1 1 1	1 1 1	1 1 1
2 2 2	2 2 2	2 2 2	2 2 2	2 2 2	2 2 2

TURN #7

F/P #1	FWD #2	F/S #3	S/A #4	AFT #5	P/A #6
1 1 1	1 1 1	1 1 1	1 1 1	1 1 1	1 1 1
2 2 2	2 2 2	2 2 2	2 2 2	2 2 2	2 2 2

TURN #8

F/P #1	FWD #2	F/S #3	S/A #4	AFT #5	P/A #6
1 1 1	1 1 1	1 1 1	1 1 1	1 1 1	1 1 1
2 2 2	2 2 2	2 2 2	2 2 2	2 2 2	2 2 2

TURN #9

F/P #1	FWD #2	F/S #3	S/A #4	AFT #5	P/A #6
1 1 1	1 1 1	1 1 1	1 1 1	1 1 1	1 1 1
2 2 2	2 2 2	2 2 2	2 2 2	2 2 2	2 2 2

TURN #10

F/P #1	FWD #2	F/S #3	S/A #4	AFT #5	P/A #6
1 1 1	1 1 1	1 1 1	1 1 1	1 1 1	1 1 1
2 2 2	2 2 2	2 2 2	2 2 2	2 2 2	2 2 2

TURN #11

F/P #1	FWD #2	F/S #3	S/A #4	AFT #5	P/A #6
1 1 1	1 1 1	1 1 1	1 1 1	1 1 1	1 1 1
2 2 2	2 2 2	2 2 2	2 2 2	2 2 2	2 2 2

TURN #12

F/P #1	FWD #2	F/S #3	S/A #4	AFT #5	P/A #6
1 1 1	1 1 1	1 1 1	1 1 1	1 1 1	1 1 1
2 2 2	2 2 2	2 2 2	2 2 2	2 2 2	2 2 2

SYSTEMS REPAIR STATUS

HITS	1ST 1-8	2ND 1-6	3RD 1-4	4TH 1-2	5TH OUT
SENSORS					
SHIELD #1					
#2					
#3					
#4					
#5					
#6					
ENGINEERING GRIDS SHIELDS					
WEAPONS					
MANEUVER					

SUPERSTRUCTURE DAMAGE TRACK

1	2	3	4	5	6	7	8	9	10	11	12	13
14	15	16	17	18	19	20	21	22	23	24	25	26

CASUALTY MODIFIER TRACK

0-19% 0	20-39% -1 -10%	40-59% -2 -20%	60-69% -5 -50%	70% + NO FIRING

CREW: **308**

PERCENT CASUALTIES TRACK

1	2	3	4	5	6	7	8	9	10	11	12	13
14	15	16	17	18	19	20	21	22	23	24	25	26
27	28	29	30	31	32	33	34	35	36	37	38	39
40	41	42	43	44	45	46	47	48	49	50	51	52
53	54	55	56	57	58	59	60	61	62	63	64	65
66	67	68	69	70	71	72	73	74	75	76	77	78
79	80	81	82	83	84	85	86	87	88	89	90	91
92	93	94	95	96	97	98	99	00				

DAMAGE CONTROL PANEL

Neale Davidson Class XI Assault Ship ***MK III***

SHIELDS

SHIELD TYPE: **FSG** SHIELD POINT RATIO: **1/1** MAXIMUM SHIELD POWER: **9**

DAMAGE CHART: **C**

TURN	#1	#2	#3	#4	#5	#6	#7	#8	#9	#10	#11	#12
Shield Points Available												

TURN #1 AFT

F/P #1	FWD #2	F/S #3	S/A #4	AFT #5	P/A #6
1 1 1	1 1 1	1 1 1	1 1 1	1 1 1	1 1 1
2 2 2	2 2 2	2 2 2	2 2 2	2 2 2	2 2 2
3 3 3	3 3 3	3 3 3	3 3 3	3 3 3	3 3 3
4 4 4	4 4 4	4 4 4	4 4 4	4 4 4	4 4 4
5 5 5	5 5 5	5 5 5	5 5 5	5 5 5	5 5 5
6 6 6	6 6 6	6 6 6	6 6 6	6 6 6	6 6 6
7 7 7	7 7 7	7 7 7	7 7 7	7 7 7	7 7 7
8 8 8	8 8 8	8 8 8	8 8 8	8 8 8	8 8 8
9 9 9	9 9 9	9 9 9	9 9 9	9 9 9	9 9 9

TURN #2

F/P #1	FWD #2	F/S #3	S/A #4	AFT #5	P/A #6
1 1 1	1 1 1	1 1 1	1 1 1	1 1 1	1 1 1
2 2 2	2 2 2	2 2 2	2 2 2	2 2 2	2 2 2
3 3 3	3 3 3	3 3 3	3 3 3	3 3 3	3 3 3
4 4 4	4 4 4	4 4 4	4 4 4	4 4 4	4 4 4
5 5 5	5 5 5	5 5 5	5 5 5	5 5 5	5 5 5
6 6 6	6 6 6	6 6 6	6 6 6	6 6 6	6 6 6
7 7 7	7 7 7	7 7 7	7 7 7	7 7 7	7 7 7
8 8 8	8 8 8	8 8 8	8 8 8	8 8 8	8 8 8
9 9 9	9 9 9	9 9 9	9 9 9	9 9 9	9 9 9

TURN #3

F/P #1	FWD #2	F/S #3	S/A #4	AFT #5	P/A #6
1 1 1	1 1 1	1 1 1	1 1 1	1 1 1	1 1 1
2 2 2	2 2 2	2 2 2	2 2 2	2 2 2	2 2 2
3 3 3	3 3 3	3 3 3	3 3 3	3 3 3	3 3 3
4 4 4	4 4 4	4 4 4	4 4 4	4 4 4	4 4 4
5 5 5	5 5 5	5 5 5	5 5 5	5 5 5	5 5 5
6 6 6	6 6 6	6 6 6	6 6 6	6 6 6	6 6 6
7 7 7	7 7 7	7 7 7	7 7 7	7 7 7	7 7 7
8 8 8	8 8 8	8 8 8	8 8 8	8 8 8	8 8 8
9 9 9	9 9 9	9 9 9	9 9 9	9 9 9	9 9 9

TURN #4

F/P #1	FWD #2	F/S #3	S/A #4	AFT #5	P/A #6
1 1 1	1 1 1	1 1 1	1 1 1	1 1 1	1 1 1
2 2 2	2 2 2	2 2 2	2 2 2	2 2 2	2 2 2
3 3 3	3 3 3	3 3 3	3 3 3	3 3 3	3 3 3
4 4 4	4 4 4	4 4 4	4 4 4	4 4 4	4 4 4
5 5 5	5 5 5	5 5 5	5 5 5	5 5 5	5 5 5
6 6 6	6 6 6	6 6 6	6 6 6	6 6 6	6 6 6
7 7 7	7 7 7	7 7 7	7 7 7	7 7 7	7 7 7
8 8 8	8 8 8	8 8 8	8 8 8	8 8 8	8 8 8
9 9 9	9 9 9	9 9 9	9 9 9	9 9 9	9 9 9

TURN #5

F/P #1	FWD #2	F/S #3	S/A #4	AFT #5	P/A #6
1 1 1	1 1 1	1 1 1	1 1 1	1 1 1	1 1 1
2 2 2	2 2 2	2 2 2	2 2 2	2 2 2	2 2 2
3 3 3	3 3 3	3 3 3	3 3 3	3 3 3	3 3 3
4 4 4	4 4 4	4 4 4	4 4 4	4 4 4	4 4 4
5 5 5	5 5 5	5 5 5	5 5 5	5 5 5	5 5 5
6 6 6	6 6 6	6 6 6	6 6 6	6 6 6	6 6 6
7 7 7	7 7 7	7 7 7	7 7 7	7 7 7	7 7 7
8 8 8	8 8 8	8 8 8	8 8 8	8 8 8	8 8 8
9 9 9	9 9 9	9 9 9	9 9 9	9 9 9	9 9 9

TURN #6

F/P #1	FWD #2	F/S #3	S/A #4	AFT #5	P/A #6
1 1 1	1 1 1	1 1 1	1 1 1	1 1 1	1 1 1
2 2 2	2 2 2	2 2 2	2 2 2	2 2 2	2 2 2
3 3 3	3 3 3	3 3 3	3 3 3	3 3 3	3 3 3
4 4 4	4 4 4	4 4 4	4 4 4	4 4 4	4 4 4
5 5 5	5 5 5	5 5 5	5 5 5	5 5 5	5 5 5
6 6 6	6 6 6	6 6 6	6 6 6	6 6 6	6 6 6
7 7 7	7 7 7	7 7 7	7 7 7	7 7 7	7 7 7
8 8 8	8 8 8	8 8 8	8 8 8	8 8 8	8 8 8
9 9 9	9 9 9	9 9 9	9 9 9	9 9 9	9 9 9

TURN #7

F/P #1	FWD #2	F/S #3	S/A #4	AFT #5	P/A #6
1 1 1	1 1 1	1 1 1	1 1 1	1 1 1	1 1 1
2 2 2	2 2 2	2 2 2	2 2 2	2 2 2	2 2 2
3 3 3	3 3 3	3 3 3	3 3 3	3 3 3	3 3 3
4 4 4	4 4 4	4 4 4	4 4 4	4 4 4	4 4 4
5 5 5	5 5 5	5 5 5	5 5 5	5 5 5	5 5 5
6 6 6	6 6 6	6 6 6	6 6 6	6 6 6	6 6 6
7 7 7	7 7 7	7 7 7	7 7 7	7 7 7	7 7 7
8 8 8	8 8 8	8 8 8	8 8 8	8 8 8	8 8 8
9 9 9	9 9 9	9 9 9	9 9 9	9 9 9	9 9 9

TURN #8

F/P #1	FWD #2	F/S #3	S/A #4	AFT #5	P/A #6
1 1 1	1 1 1	1 1 1	1 1 1	1 1 1	1 1 1
2 2 2	2 2 2	2 2 2	2 2 2	2 2 2	2 2 2
3 3 3	3 3 3	3 3 3	3 3 3	3 3 3	3 3 3
4 4 4	4 4 4	4 4 4	4 4 4	4 4 4	4 4 4
5 5 5	5 5 5	5 5 5	5 5 5	5 5 5	5 5 5
6 6 6	6 6 6	6 6 6	6 6 6	6 6 6	6 6 6
7 7 7	7 7 7	7 7 7	7 7 7	7 7 7	7 7 7
8 8 8	8 8 8	8 8 8	8 8 8	8 8 8	8 8 8
9 9 9	9 9 9	9 9 9	9 9 9	9 9 9	9 9 9

TURN #9

F/P #1	FWD #2	F/S #3	S/A #4	AFT #5	P/A #6
1 1 1	1 1 1	1 1 1	1 1 1	1 1 1	1 1 1
2 2 2	2 2 2	2 2 2	2 2 2	2 2 2	2 2 2
3 3 3	3 3 3	3 3 3	3 3 3	3 3 3	3 3 3
4 4 4	4 4 4	4 4 4	4 4 4	4 4 4	4 4 4
5 5 5	5 5 5	5 5 5	5 5 5	5 5 5	5 5 5
6 6 6	6 6 6	6 6 6	6 6 6	6 6 6	6 6 6
7 7 7	7 7 7	7 7 7	7 7 7	7 7 7	7 7 7
8 8 8	8 8 8	8 8 8	8 8 8	8 8 8	8 8 8
9 9 9	9 9 9	9 9 9	9 9 9	9 9 9	9 9 9

TURN #10

F/P #1	FWD #2	F/S #3	S/A #4	AFT #5	P/A #6
1 1 1	1 1 1	1 1 1	1 1 1	1 1 1	1 1 1
2 2 2	2 2 2	2 2 2	2 2 2	2 2 2	2 2 2
3 3 3	3 3 3	3 3 3	3 3 3	3 3 3	3 3 3
4 4 4	4 4 4	4 4 4	4 4 4	4 4 4	4 4 4
5 5 5	5 5 5	5 5 5	5 5 5	5 5 5	5 5 5
6 6 6	6 6 6	6 6 6	6 6 6	6 6 6	6 6 6
7 7 7	7 7 7	7 7 7	7 7 7	7 7 7	7 7 7
8 8 8	8 8 8	8 8 8	8 8 8	8 8 8	8 8 8
9 9 9	9 9 9	9 9 9	9 9 9	9 9 9	9 9 9

TURN #11

F/P #1	FWD #2	F/S #3	S/A #4	AFT #5	P/A #6
1 1 1	1 1 1	1 1 1	1 1 1	1 1 1	1 1 1
2 2 2	2 2 2	2 2 2	2 2 2	2 2 2	2 2 2
3 3 3	3 3 3	3 3 3	3 3 3	3 3 3	3 3 3
4 4 4	4 4 4	4 4 4	4 4 4	4 4 4	4 4 4
5 5 5	5 5 5	5 5 5	5 5 5	5 5 5	5 5 5
6 6 6	6 6 6	6 6 6	6 6 6	6 6 6	6 6 6
7 7 7	7 7 7	7 7 7	7 7 7	7 7 7	7 7 7
8 8 8	8 8 8	8 8 8	8 8 8	8 8 8	8 8 8
9 9 9	9 9 9	9 9 9	9 9 9	9 9 9	9 9 9

TURN #12

F/P #1	FWD #2	F/S #3	S/A #4	AFT #5	P/A #6
1 1 1	1 1 1	1 1 1	1 1 1	1 1 1	1 1 1
2 2 2	2 2 2	2 2 2	2 2 2	2 2 2	2 2 2
3 3 3	3 3 3	3 3 3	3 3 3	3 3 3	3 3 3
4 4 4	4 4 4	4 4 4	4 4 4	4 4 4	4 4 4
5 5 5	5 5 5	5 5 5	5 5 5	5 5 5	5 5 5
6 6 6	6 6 6	6 6 6	6 6 6	6 6 6	6 6 6
7 7 7	7 7 7	7 7 7	7 7 7	7 7 7	7 7 7
8 8 8	8 8 8	8 8 8	8 8 8	8 8 8	8 8 8
9 9 9	9 9 9	9 9 9	9 9 9	9 9 9	9 9 9

DAMAGE POINT RECORD

TURN	#1	#2	#3	#4
	#5	#6	#7	#8
	#9	#10	#11	#12

SYSTEMS REPAIR STATUS

HITS	1ST 1-8	2ND 1-6	3RD 1-4	4TH 1-2	5TH OUT
SENSORS					
SHIELD #1					
#2					
#3					
#4					
#5					
#6					
ENGINEERING GRIDS SHIELDS					
WEAPONS					
MANEUVER					

SUPERSTRUCTURE DAMAGE TRACK

1	2	3	4	5	6	7	8	9	10	11	12	13
14	15	16	17	18	19	20	21	22	23	24	25	26
27	28	29										

CASUALTY MODIFIER TRACK

0-19% 0	20-39% -1 -10%	40-59% -2 -20%	60-69% -5 -50%	70% + NO FIRING

CREW: **318**

PERCENT CASUALTIES TRACK

1	2	3	4	5	6	7	8	9	10	11	12	13
14	15	16	17	18	19	20	21	22	23	24	25	26
27	28	29	30	31	32	33	34	35	36	37	38	39
40	41	42	43	44	45	46	47	48	49	50	51	52
53	54	55	56	57	58	59	60	61	62	63	64	65
66	67	68	69	70	71	72	73	74	75	76	77	78
79	80	81	82	83	84	85	86	87	88	89	90	91
92	93	94	95	96	97	98	99	00				